PLANNING DIMENSIONS

All dimensions in millimetres

Full overlay — K-2/0

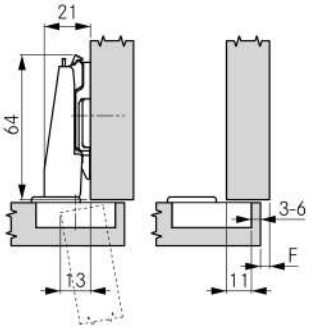

Mounting plate height 2

Door overlay	-2	Cup distance 3	4	5	6		0
	21				0		19
	20			0			18
	19		0		2		17
	18	0		2	3		16
	17		2	3	4		15
	16	2	3	4			14
	15	3	4				13
	14	4					12
	Mounting plate height						

Half overlay — K8

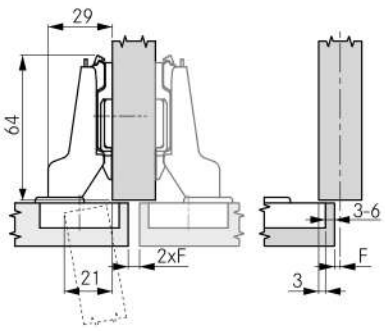

Mounting plate height 2

Door overlay	8	Cup distance 3	4	5	6		
	11				0		
	10			0			
	9		0		2		
	8	0		2	3		
	7		2	3	4		
	6	2	3	4			
	5	3	4				
	Mounting plate height						

Inset — K15

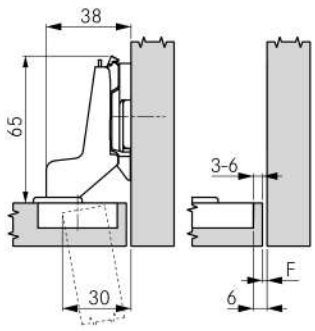

Mounting plate height 4

Door reveal	15	Cup distance 3	4	5	6		
	0		2	3	4		
	1	2	3	4			
	2	3	4				
	Mounting plate height						

MINIMUM GAP

Door thickness		Cup distance 3	4	5	6		
	16	0.5	0.5	0.5	0.5		
	18	0.5	0.5	0.5	0.5		
	19	0.5	0.5	0.5	0.5		
	20	0.0	0.0	0.0	0.5		
	22	0.5	0.5	0.5	0.8		
	24	0.5	0.5	0.5	1.1		
	Minimum gap						

MINIMUM REVEAL

Door thickness		Cup distance 3	4	5	6		
	16	0.6	0.6	0.6	0.6		
	18	0.9	0.9	0.9	0.9		
	19	1.1	1.1	1.1	1.1		
	20	1.4	1.4	1.4	1.4		
	22	1.9	1.9	1.9	1.9		
	24	2.5	2.5	2.5	2.5		
	Minimum reveal (F)						

NOTES

The minimum gap is the clearance required between the front edge of the cabinet and the closed door so that the door can be opened without hindrance.

Important: Reveals were determined with a (door) edge radius of 1 mm.

Hinge dimensions and reveal calculation with factory setting.

We recommend a trial fitting.

DRILLING PATTERNS

For screw fitting

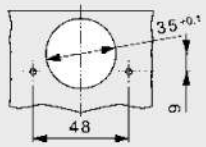

For press fitting

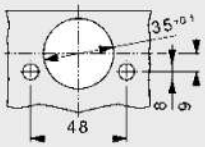
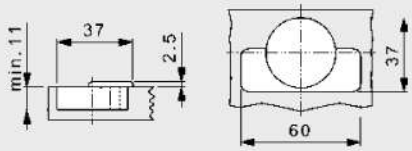
CUP DIMENSIONS